LGP

PLUNGER METERING PUMP

ZHEJIANG LIGAO PUMP TECHNOLOGY CO.,LTD

Add: No. 227, Huishu Road, Liangshui Industrial Zone, Linhai City, Zhejiang, China
Zip Code: 317000
Tel: +86 - 576 -85289780 Fax: +86 - 576-85668297
Email: sales@ligaopumps.com

CE ISO9001 ISO14001

PLUNGER

METERING PUMP

JSX

2J-X

JSZ

JSR

JSD

JDR

J-T

Plunger Pumps

LGP plunger pump is designed for high pressure and heavy-duty applications. All LGP plunger pumps are push and pull design. Unlike loss motion pumps, LGP plunger pumps are without spring. The plunger makes harmonic motion by the crankshaft.

Features:

- Flow rate can be adjusted via unique adjusting mechanism from 0-100%
- The adjustment can be carried when pump is in operation or at stop
- The steady accuracy is ±1% from 30%-100% of the maximum output
- Automatic operation is achieved by variable speed drive
- Special application for high temperature or low temperature is available with cooling jacket or heating jacket

Materials:

- Pump Head: SS304, SS316
- Pump Case: Cast Iron
- Plunger: Ceramic or SS316 coated with ceramic
- Packing Seal: PTFE and SS316 Ring
- Valves: SS304, SS316
- Valve Balls: SS304, SS316, Ceramic

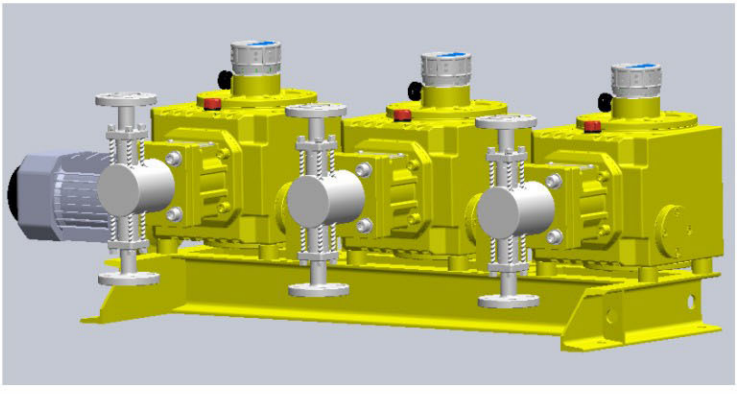

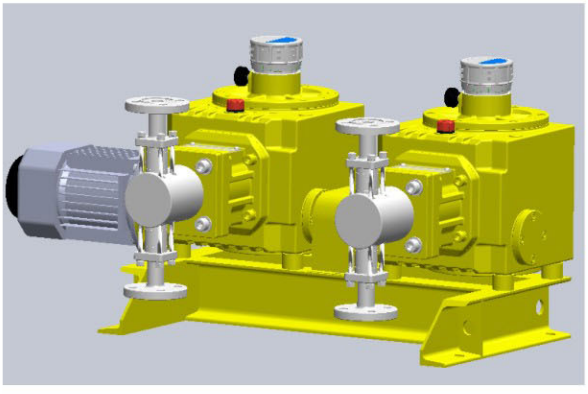

Multiplex drive unit is available for model JSZ,JSR,JSD,JDR

JSX Series

Unit: mm

Model	A	B	C	D
JSX 2-5	199	58	160.5	357
JSX 8-25	199	58	166.5	363
JSX 40-85	220	64	170.5	367
JSX 100-200	225	69	170.5	367

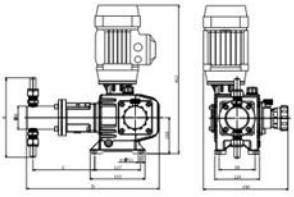

▪ Parameter Table

Model	50Hz			60Hz			Pressure		Plunger Dia. (mm)	Stroke Length (mm)	Power KW(HP)	Inlet&Outlet Size	Connection Size
	Flow (lph)	Flow (gph)	SPM	Flow (gph)	Flow (lph)	SPM	(Bar)	(Psi)					
JSX 2/40	2	0.5		0.6	2.4		400	5800	6				
JSX 3/32	3	0.8		1.0	3.6		320	4640	8				6*12mm (union for welding)
JSX 5/20	5	1.3		1.6	6.0		200	2900	10			DN6	
JSX 8/14	8	2.1		2.5	9.6		140	2030	12				
JSX 15/7.6	15	4.0		4.8	18		76	1102	16				
JSX 25/5.0	25	6.6	80	7.9	30	96	50	725	20				
JSX 40/3.2	40	11		13	48		32	464	25	20	0.37(0.5)		
JSX 50/2.5	50	13		16	60		25	363	28				
JSX 70/2.0	70	18		22	84		20	290	32				10*16mm (union for welding)
JSX 80/1.6	85	22		27	102		16	232	35			DN10	
JSX 100/1.3	100	26		32	120		13	189	38				
JSX 125/1.0	125	33		40	150		10	145	42				
JSX 150/1.3	150	40		48	180		13	189	38				
JSX 200/1.0	195	52	120	62	234	144	10	145	42				

2J-X Series

Unit: mm

Model	A	B	C	D
2J-X 5-60	192	58	166/178*	449/461*
2J-X 100	198	64	176/188*	459/471*
2J-X 130	198	64	176	459
2J-X 160	203	69	176	459
2J-X 200-300	203	69	176	459

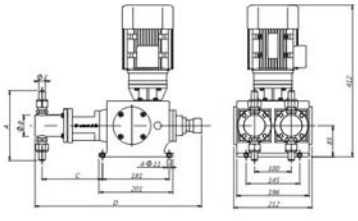

▪ Parameter Table

Model	50Hz			60Hz			Pressure		Plunger Dia. (mm)	Stroke Length (mm)	Power KW(HP)	Inlet&Outlet Size	Connection Size
	Flow (lph)	Flow (gph)	SPM	Flow (gph)	Flow (lph)	SPM	(Bar)	(Psi)					
2J-X 5/40	5	1.3		1.6	6		400	5580	6				
2J-X 8/32	8	2.1		2.5	10		320	4640	8				6*12mm (union for welding)
2J-X 16/20	16	4.2		5.1	19		200	2900	10			DN6	
2J-X 25/14	25	6.6		7.9	30		140	2030	12				
2J-X 40/5.4	40	11		13	48		54	783	16				
2J-X 60/3.5	60	16	96	19	72	115	35	508	20	20	0.37(0.5)		
2J-X 100/2.2	100	26		32	120		22	319	25				
2J-X 130/1.7	130	34		41	156		17	247	28				10*16mm (union for welding)
2J-X 160/1.3	160	42		51	192		13	189	32			DN10	
2J-X 200/1.0	200	53		63	240		10	145	35				
2J-X 250/0.8	250	66		79	300		8	116	38				
2J-X 300/0.6	300	79		95	360		8	116	42				

JSZ Series

▪ Parameter Table

Model	50Hz			60Hz			Pressure		Plunger Dia. (mm)	Stroke Length (mm)	Power KW(HP)	Inlet&Outlet Size	Connection Size
	Flow (lph)	Flow (gph)	SPM	Flow (gph)	Flow (lph)	SPM	(Bar)	(Psi)					
JSZ 6/40	6	1.6		1.9	7.2		400	5800	8				
JSZ 10/25	10	2.6		3.2	12		250	3625	10				6*12mm (union for welding)
JSZ 15/20	15	4.0		4.8	18		200	2900	12			DN6	
JSZ 25/10	25	6.6		7.9	30		100	1450	16				
JSZ 40/6.3	40	11		13	48		63	914	20				
JSZ 65/4.5	65	17		21	78		45	653	25				
JSZ 80/3.6	80	21	96	25	96	115	36	522	28				10*16mm (union for welding)
JSZ 110/2.8	110	29		35	132		28	406	32	25	0.75(1)	DN10	
JSZ 130/2.3	130	34		41	156		23	334	35				
JSZ 160/2.0	160	42		51	192		20	290	38				
JSZ 190/1.6	190	50		60	228		16	232	42				
JSZ 270/1.1	270	71		86	324		11	160	50				
JSZ 330/0.9	330	87		105	396		9	131	55				15*24mm (union for welding
JSZ 400/0.8	400	106		127	480		8	116	60			DN15	
JSZ 500/0.9	500	132	144	159	600	173	9	131	55				
JSZ 600/0.6	600	159		190	720		6	87	60				

Unit: mm

Model	A	B	C	D
JSZ 6-15	207	61	173	427
JSZ 25	207	61	176	430
JSZ 40	213	67	176	430
JSZ 65-80	219	67	176	430
JSZ 110-160	219	67	182	436
JSZ 190	231	79	182	436
JSZ 270	231	79	186	444
JSZ 330-600	243	91	192	450

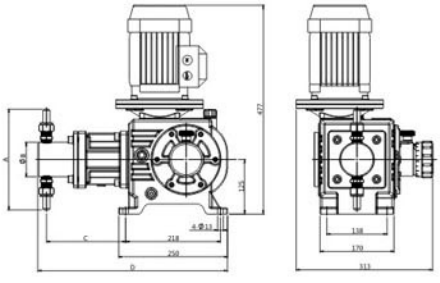

JSR Series

▪ Parameter Table

Model	50Hz			60Hz			Pressure		Plunger Dia. (mm)	Stroke Length (mm)	Power KW(HP)	Inlet&Outlet Size	Connection Size
	Flow (lph)	Flow (gph)	SPM	Flow (gph)	Flow (lph)	SPM	(Bar)	(Psi)					
JSR 6/50	6.5	1.7		2.1	7.8		500	7250	8				
JSR 16/40	16	4.2		5.1	19		400	5800	12			DN6	6*12mm (union for welding)
JSR 30/22	30	7.9		9.5	36		220	3190	16				
JSR 50/14	50	13		16	60		140	2030	20				
JSR 80/9.0	80	21		25	96		90	1305	25				
JSR 100/7.5	100	26		32	120		75	1088	28			DN10	10*16mm (union for welding)
JSR 130/5.6	130	34		41	156		56	812	32				
JSR 160/4.8	160	42		51	192		48	696	35				
JSR 190/4.0	190	50	96	60	228	115	40	580	38	30	1.5(2)		
JSR 225/3.2	225	59		71	270		32	464	42			DN15	15*24mm (union for welding
JSR 260/2.8	260	69		82	312		28	406	45				
JSR 330/2.3	330	87		105	396		23	334	50				
JSR 400/1.8	400	106		127	480		18	261	55				
JSR 480/1.6	480	127		152	576		16	232	60				
JSR 550/1.3	550	145		174	660		13	189	65			DN20	DN20 DF
JSR 650/1.2	650	172		206	780		12	174	70				
JSR 800/1.0	800	211	144	254	960	173	10	145	65				
JSR 1000/1.0	990	262		314	1188		10	145	70				

Unit: mm

Model	A	B	C	D
JSR 6-16	207	61	184.5	490
JSR 30-50	207	61	203.5	509
JSR 80-130	213	61	194.5	400
JSR 160-225	223	71	194.5	500
JSR 260-330	233	81	198.5	508
JSR 400-480	325	91	213	551
JSR 550-1000	335	101	213	551

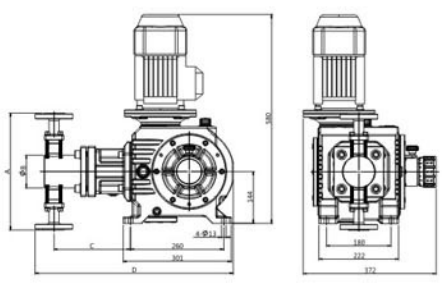

JSD Series

▪ Parameter Table

Model	50Hz			60Hz			Pressure		Plunger Dia. (mm)	Stroke Length (mm)	Power KW(HP)	Inlet&Outlet Size	Connection Size
	Flow (lph)	Flow (gph)	SPM	Flow (gph)	Flow (lph)	SPM	(Bar)	(Psi)					
JSD 23/50	23	6.1		7.3	28		500	7250	12			DN10	DN10 WN
JSD 40/40	40	11		13	48		400	5800	16				
JSD 63/28	63	17		20	76		280	4060	20				
JSD 105/18	105	28		33	126		180	2610	25			DN15	DN15 WN
JSD 175/11	175	46		55	210		110	1595	32				
JSD 240/8.0	240	63		76	288		80	1160	38				
JSD 300/6.3	300	79		95	360		63	914	42				
JSD 360/5.5	360	95		114	432		55	798	45				
JSD 450/4.5	450	119		143	540		45	653	50			DN20	DN20 RF
JSD 540/3.8	540	143		171	648		38	551	55				
JSD 650/3.2	650	172		206	780		32	464	60				
JSD 760/2.6	760	201	100	241	912	120	26	377	65	40	3(4)		
JSD 900/2.3	900	238		285	1080		23	334	70			DN25	DN25 RF
JSD 1050/2.0	1050	277		333	1260		20	290	75				
JSD 1200/1.8	1200	317		380	1440		18	261	80				
JSD 1350/1.6	1350	357		428	1620		16	232	85				
JSD 1500/1.4	1500	396		476	1800		14	203	90			DN32	DN32 RF
JSD 1680/1.2	1680	444		533	2016		12	174	95				
JSD 1850/1.0	1850	489		587	2220		10	145	100				
JSD 2050/0.8	2050	542		650	2460		8	116	105			DN40	DN40 RF
JSD 2500/1.0	2500	661	150	793	3000	180	10	145	95			DN32	DN32 RF
JSD 3000/0.6	3000	793		951	3600		6	87	105			DN40	DN40 RF

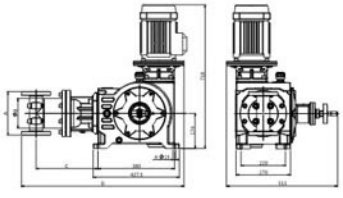

Unit: mm

Model	A	B	C	D	Model	A	B	C	D
JSD 23-240	360	98	276.5	724.5	JSD 1500-1680	407	128	275.5	749
JSD 300-360	360	98	266.5	714.5	JSD 1850	417	138	275.5	749
JSD 450-760	328	98	276.5	729.5	JSD 2050	216	148	308	806
JSD 900-1050	349	108	269.5	730.5	JSD 2500	407	128	275.5	749
JSD 1200-1350	359	118	269.5	730.5	JSD 3000	216	148	308	806

JDR Series

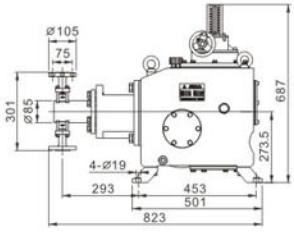

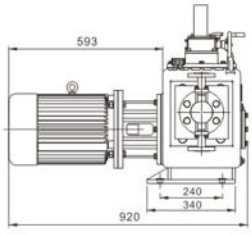

▪ Parameter Table

Model	50Hz			60Hz			Pressure		Plunger Dia. (mm)	Stroke Length (mm)	Power KW(HP)	Inlet&Outlet Size	Connection Size
	Flow (lph)	Flow (gph)	SPM	Flow (gph)	Flow (lph)	SPM	(Bar)	(Psi)					
JDR 92/50	92	24	96	29	110	115	500	7250	20	60	5.5(7.5)	DN15	DN15 WN
JDR 145/32	145	38		46	174		320	4640	25				
JDR 190/18	190	50		60	228		250	3625	28				
JDR 240/20	240	63		76	288		200	2900	32				
JDR 430/11	430	114		136	516		110	1595	42			DN20	DN20 WN
JDR 520/9.0	520	137		165	624		90	1305	45				
JDR 650/8.0	650	172		206	780		80	1160	50				
JDR 780/6.5	780	206		247	936		65	943	55				
JDR 930/5.5	930	246		295	1116		55	798	60			DN25	DN25 RF
JDR 1100/4.6	1100	291		349	1320		46	667	65				
JDR 1300/4.0	1300	343		412	1560		40	580	70				
JDR 1480/3.5	1480	391		469	1776		35	508	75				
JDR 1700/3.0	1700	449		539	2040		30	435	80			DN32	DN32 RF
JDR 1920/2.8	1920	507		609	2304		28	406	85				
JDR 2150/2.4	2150	568		682	2580		24	348	90				
JDR 2400/2.2	2400	634		761	2880		22	319	95				
JDR 2680/2.0	2680	708		850	3216		18	261	100			DN40	DN40 RF
JDR 3250/1.6	3250	859		1030	3900		15	218	110				
JDR 3860/1.3	3860	1020		1224	4632		13	189	120				
JDR 4550/1.1	4550	1202		1443	5460		11	160	130				
JDR 5260/1.0	5260	1390		1668	6312		10	145	140			DN50	DN50 RF
JDR 6050/0.8	6050	1598		1918	7260		8	116	150				

J-T Series

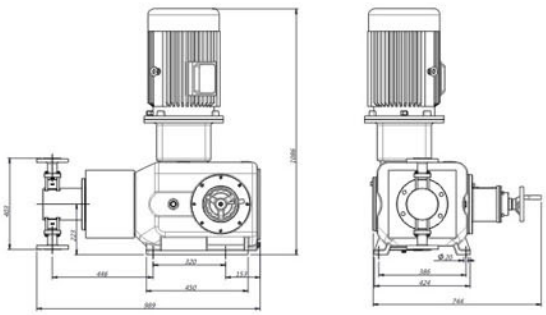

▪ Parameter Table

Model	50Hz			60Hz			Pressure		Plunger Dia. (mm)	Stroke Length (mm)	Power KW(HP)	Inlet&Outlet Size	Connection Size
	Flow (lph)	Flow (gph)	SPM	Flow (gph)	Flow (lph)	SPM	(Bar)	(Psi)					
J-T 180/50	186	49	93	59	223	112	500	7250	25	80	11(15)	DN15	DN15 WN
J-T 220/40	229	61		73	275		400	5800	28				
J-T 300/30	304	80		96	365		300	4350	32				
J-T 450/22	455	120		144	546		220	3190	38			DN20	DN20 WN
J-T 550/18	556	147		176	667		180	2610	42				
J-T 780/12	788	208		250	946		120	1740	50				
J-T 1000/10	1000	264		317	1200		100	1450	55			DN25	DN25 RF
J-T 1200/8.5	1200	317		380	1440		85	1233	60				
J-T 1400/7.5	1420	375		450	1704		75	1088	65				
J-T 1650/6.5	1665	440		528	1998		65	943	70				
J-T 1900/5.5	1910	505		606	2292		55	798	75			DN32	DN32 RF
J-T 2200/4.8	2200	581		697	2640		48	696	80				
J-T 2480/4.3	2485	657		788	2982		43	624	85				
J-T 2800/3.8	2800	740		888	3360		38	551	90				
J-T 3100/3.5	3130	827		992	3756		35	508	95				
J-T 3460/3.1	3468	916		1099	4162		31	450	100			DN40	DN40 RF
J-T 4200/2.6	4200	1110		1332	5040		26	377	110				
J-T 5000/2.2	5000	1321		1585	6000		22	319	120				
J-T 5800/1.8	5890	1556		1867	7068		18	261	130				
J-T 6800/1.6	6830	1804		2165	8196		16	232	140			DN50	DN50 RF
J-T 7800/1.4	7840	2071		2486	9408		14	203	150				
J-T 8900/1.2	8920	2357		2828	10704		12	174	160				
J-T 10000/1.1	10050	2655		3186	12060		11	160	170				
J-T 11300/0.9	11330	2993		3592	13596		9	131	180			DN65	DN65 RF
J-T 12600/0.8	12600	3329		3995	15120		8	116	190				
J-T 14000/0.6	14000	3699		4439	16800		6	87	200				